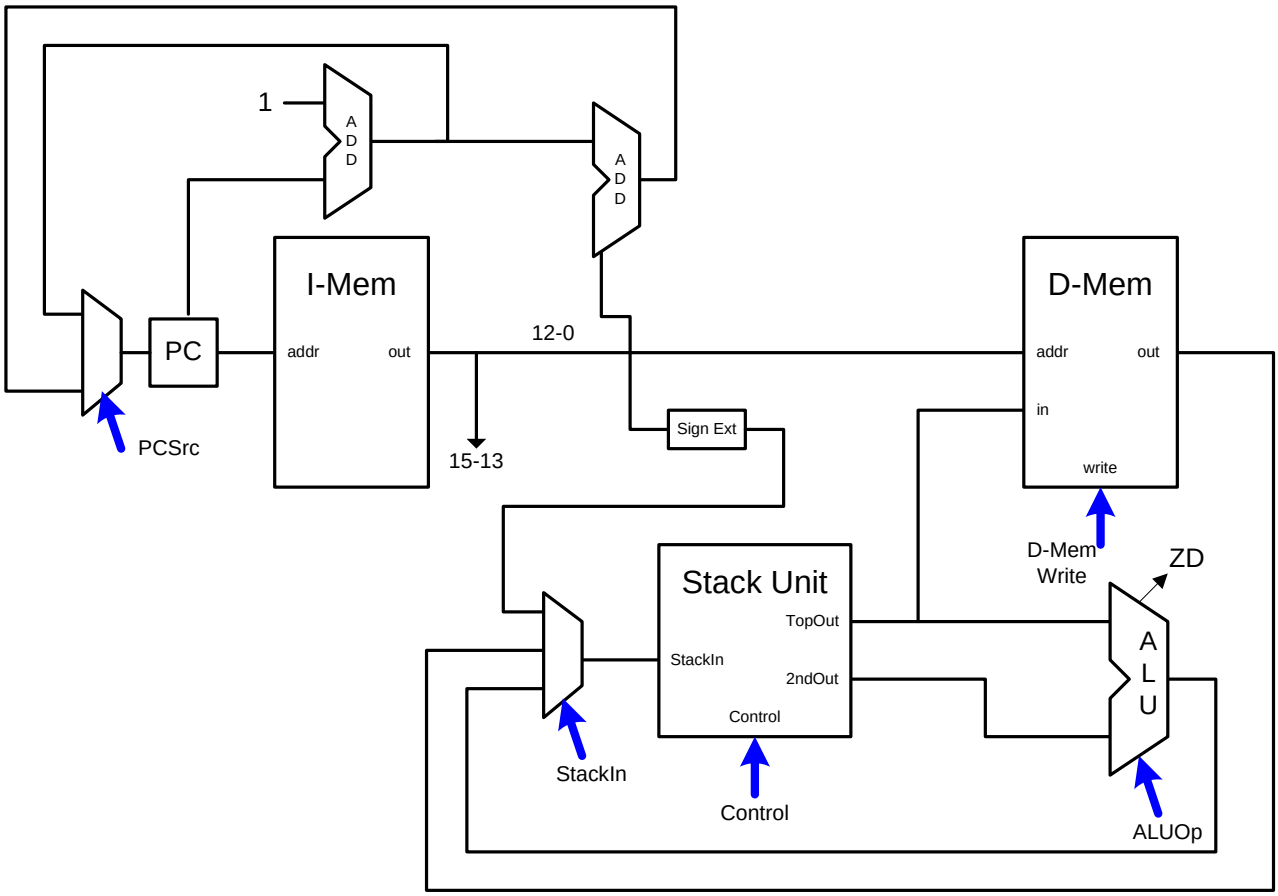

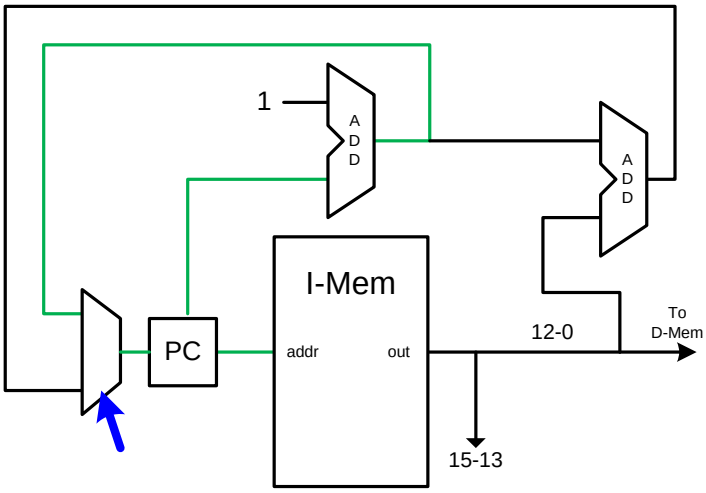

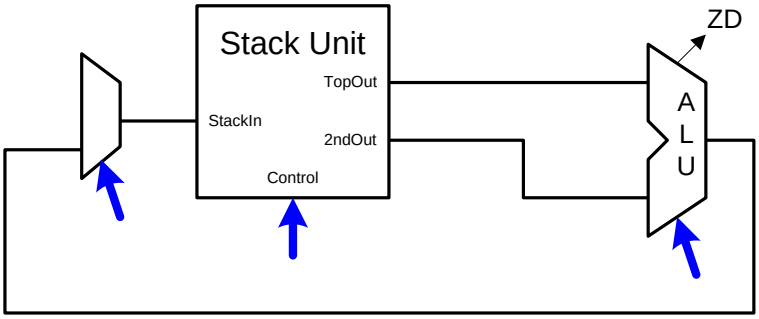

Bits 15-13	Bits 12-0
opcode	Z

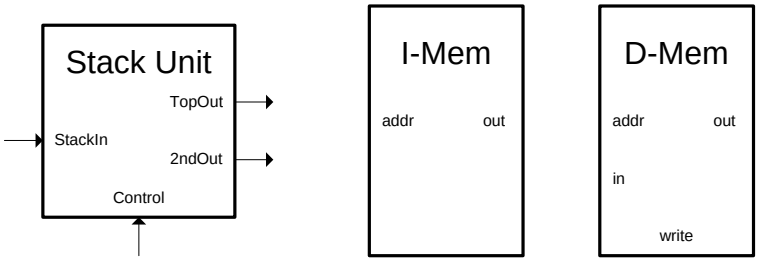

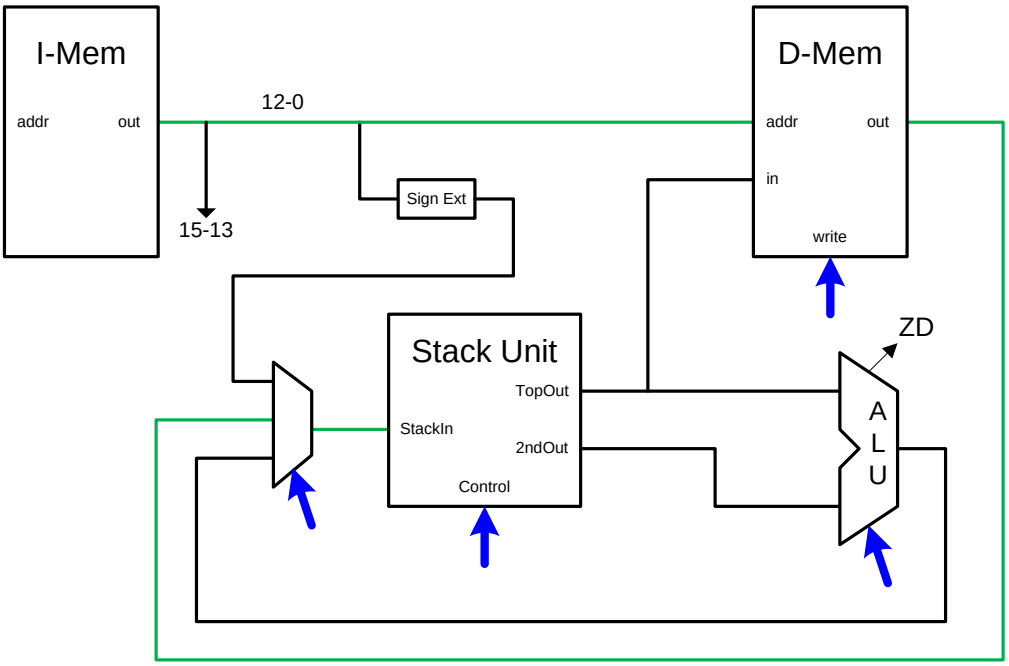
I-Mem
addr
out
12-0
15-13
Sign Ext
D-Mem
addr
out
in
write
Stack Unit
TopOut
StackIn
2ndOut
Control
ZD
A
L
U

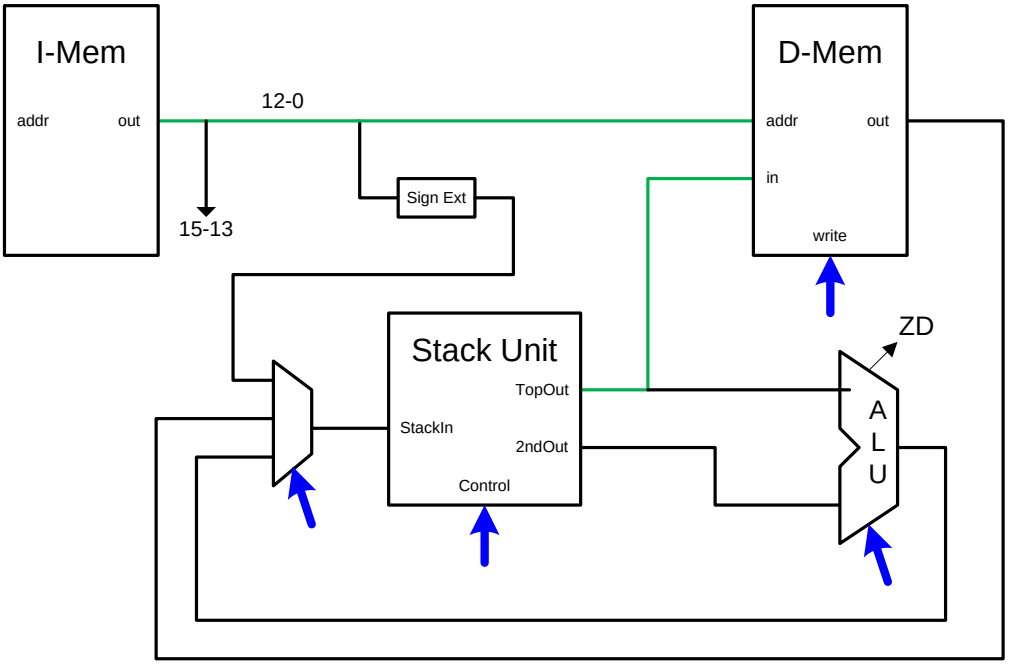
I-Mem
addr
out
12-0
15-13
Sign Ext
D-Mem
addr
out
in
write
Stack Unit
TopOut
StackIn
2ndOut
Control
ZD
A
L
U

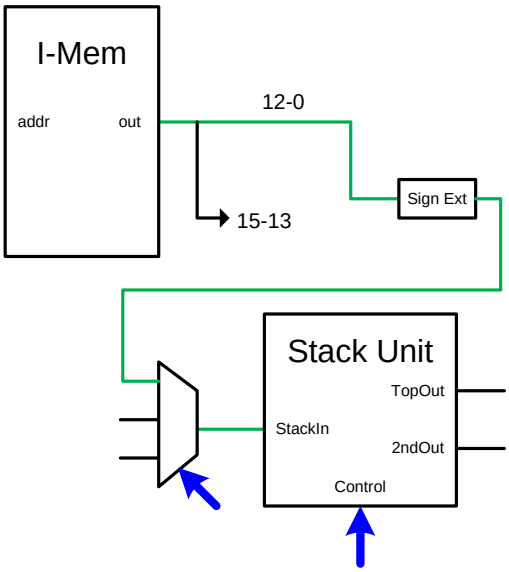
I-Mem
addr
out
12-0
15-13
Sign Ext
Stack Unit
TopOut
StackIn
2ndOut
Control

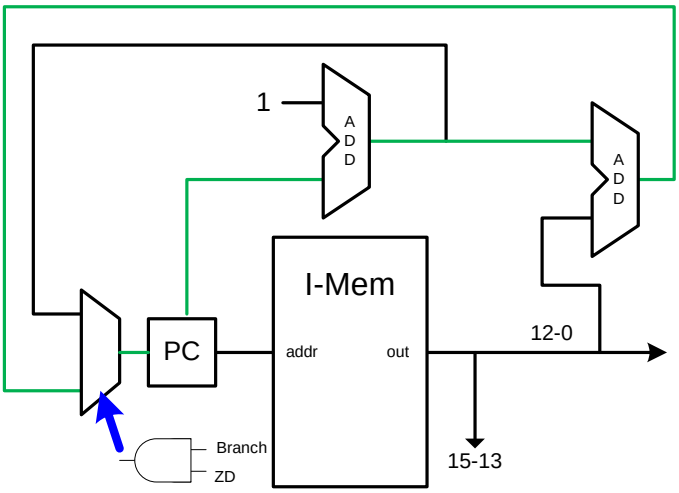
1
A
D
D
A
D
D
PC
I-Mem
addr
out
12-0
15-13
Branch
ZD