## DOOR/WINDOW SCHEDULE

NOTES:

1. CLAD WINDOWS W/ LOW-E GLAZING. MUNTINS & HINGING PER ELEVATIONS
2. NOMINAL SIZES OF WINDOWS AND DOORS ARE SHOWN ON EXTERIOR ELEVATIONS VERIFY FRAME AND R.O. SIZES W/ MANUFACTURER

| NO | LOCATION | DOOR/WINDOW TYPE | FOR WINDOW SUPPLIERS USE |
|---|---|---|---|
| B1 | GARAGE | OVERHEAD GARAGE DOOR | |
| B2 | GARAGE | OVERHEAD GARAGE DOOR | |
| B3 | GARAGE | AWNING - AWNING | |
| B4 | BEDROOM 3 | CASEMENT - FIXED | |
| B5 | BEDROOM 3 | CASEMENT | |
| B6 | BEDROOM 4 | CASEMENT - CASEMENT | |
| B7 | BEDROOM 4 | OUTSWING FULL LIGHT DOOR | |
| B8 | REC. ROOM | OUTSWING FULL LIGHT DOOR | |
| B9 | REC. ROOM | CASEMENT | |
| B10 | GARDEN STORAGE | OUTSWING PANEL DOOR | |
| | | | |
| M1 | PANTRY | CASEMENT - FIXED - CASEMENT | |
| M2 | ENTRY | INSWING FULL LIGHT DOOR | |
| M3 | ENTRY | FIXED | |
| M4 | ENTRY | FIXED - FIXED | |
| M5 | UTILITY ROOM | CASEMENT - CASEMENT | |
| M6 | BEDROOM 2 BATHROOM | CASEMENT | |
| M7 | BEDROOM 2 | CASEMENT - FIXED - CASEMENT | |
| M8 | MASTER SUITE | CASEMENT - FIXED | |
| M9 | MASTER SUITE | 4-PANEL SLIDING GLASS DOOR | |
| M10 | MASTER SUITE | 4-PANEL TRANSOM WINDOW | |
| M11 | MASTER BATHROOM | FIXED | |
| M12 | MASTER BATHROOM | CASEMENT | |
| M13 | MASTER BATHROOM | FIXED | |
| M14 | DEN | (2) FIXED - CASEMENT - FIXED - (2) FIXED | |
| M15 | DINING ROOM | 4-PANEL SLIDING GLASS DOOR | |
| M16 | DINING ROOM | 4-PANEL TRANSOM WINDOW | |
| M17 | FAMILY ROOM | 4-PANEL SLIDING GLASS DOOR | |
| M18 | FAMILY ROOM | 4-PANEL TRANSOM WINDOW | |
| M19 | FAMILY ROOM | OUTSWING FULL LIGHT DOOR | |
| M20 | FAMILY ROOM | FIXED | |
| M21 | FAMILY ROOM | OUTSWING FULL LIGHT DOOR | |
| M22 | STORAGE SHED | 2-PANEL SLIDER | |

## DOOR/ WINDOW NOTES

1. WINDOW SUPPLIER SHALL REFER TO FLOOR PLANS, EXTERIOR ELEVATIONS AND SCHEDULES FOR CONFIGURATION AND OPERATION OF ALL WINDOW AND DOOR UNITS. MAINTAIN ALIGNMENTS AND FORMATS TO MEET DESIGN INTENT. ADJUST ROUGH OPENINGS AS NECESSARY. SUBMIT SHOP DRAWINGS FOR APPROVAL.
2. SIZES SHOWN ARE NOMINAL FRAME SIZE; VERIFY R.O. W/ MANUFACTURER
3. CERTIFIED NFRC RATING STICKER TO REMAIN ON WINDOWS THROUGH DURATION OF CONSTRUCTION. HINGING PER ELEVATIONS
4. CONTRACTOR TO COORDINATE ANY PRODUCT OR MANUFACTURING ALTERNATES WITH THE ARCHITECT PRIOR TO PURCHASE AND INSTALLATION.
5. TEMPERED GLASS REQUIRED IN THE FOLLOWING LOCATIONS:
   - GLAZED DOORS
   - WINDOWS WITHIN 24" OF A DOOR HAVING SILL HEIGHTS BELOW 60"
   - WINDOWS WITHIN 18" OF THE FLOOR HAVING AN AREA GREATER THAN 4 SF
   - WINDOWS IN WALLS ENCLOSING STAIRWAY OR WITHIN 60" OF TOP AND BOTTOM OF STAIR
   - WINDOWS IN SHOWERS AND TUB ENCLOSURES

## MECHANICAL SYSTEM

HEATING:
EXISTING HEAT PUMP WITH EXISTING FORCED AIR ELECTRIC FURNACE.

WATER HEATER:
EXISTING 66 GALLON ELECTRIC WATER HEATER

## VICINITY MAP

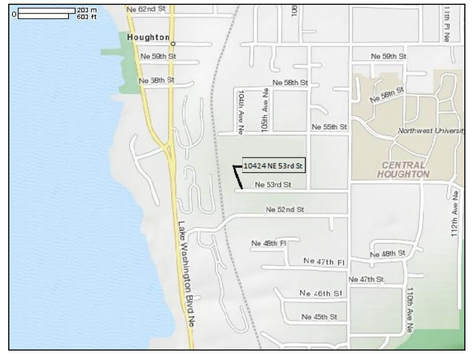


## GENERAL NOTES

1. STRUCTURAL DRAWINGS SHALL BE USED IN CONJUNCTION WITH ARCHITECTURAL DRAWINGS FOR BIDDING AND CONSTRUCTION. DRAWINGS INDICATE GENERAL AND TYPICAL DETAILS OF CONSTRUCTION. WHERE CONDITIONS ARE NOT SPECIFICALLY INDICATED BUT ARE OF A SIMILAR CHARACTER TO DETAILS SHOWN, SIMILAR DETAILS OF CONSTRUCTION SHALL BE USED, SUBJECT TO REVIEW AND APPROVAL BY THE ARCHITECT.
2. REFER TO DIMENSIONS AND NOTES FOR SIZES AND LOCATIONS; **DO NOT SCALE DRAWINGS.** DIMENSIONS ARE TO FACE OF STUD OR MASONRY WALL AND CENTERLINE OF COLUMNS, UNLESS NOTED OTHERWISE. CONTRACTOR SHALL VERIFY ALL DIMENSIONS AND CONDITIONS FOR COMPATIBILITY BEFORE PROCEEDING. ANY DISCREPANCIES SHALL BE BROUGHT TO THE ATTENTION OF THE ARCHITECT.
3. THE CONTRACTOR SHALL BE RESPONSIBLE FOR COORDINATING THE WORK OF ALL TRADES INVOLVED IN THE PROJECT. THE CONTRACTOR SHALL BE RESPONSIBLE FOR ALL SAFETY PRECAUTIONS AND THE METHODS, TECHNIQUES, SEQUENCES OR PROCEDURES REQUIRED TO PERFORM THE WORK. THE CONTRACTOR SHALL BE RESPONSIBLE FOR ERECTION STABILITY AND TEMPORARY SHORING AS NECESSARY UNTIL PERMANENT SUPPORT AND STIFFENING ARE INSTALLED.
4. CONTRACTOR-INITIATED CHANGES SHALL BE SUBMITTED IN WRITING TO THE ARCHITECT FOR APPROVAL PRIOR TO FABRICATION OR CONSTRUCTION. CHANGES SHOWN ON SHOP DRAWINGS ONLY WILL NOT SATISFY THIS REQUIREMENT.
5. GUARDRAILS OR HANDRAILS SHALL BE PROVIDED ON ALL OPEN SIDES OF STAIRS OR ELEVATED PLATFORMS. GUARDRAILS SHALL NOT BE LESS THAN 36" HIGH. HANDRAILS SHALL BE BETWEEN 34" AND 38" ABOVE STAIR NOSING. OPENINGS SHALL RESTRICT A 4" DIAMETER SPHERE FROM PASSING THROUGH. HANDGRIPS SHALL NOT BE LESS THAN 1 1/2" NOR MORE THAN 2" IN CROSS-SECTIONAL DIMENSION. RETURN HANDRAILS AT ENDS.

## APPLICABLE CODES

2009 INTERNATIONAL RESIDENTIAL CODE (IRC)
2009 INTERNATIONAL BUILDING CODE (IBC), AS APPLICABLE
2006 WASHINGTON STATE ENERGY CODE, WAC 51-11 (WSEC)
2009 UNIFORM PLUMBING CODE (UPC)
2008 NATIONAL ELECTRIC CODE
2009 INTERNATIONAL FIRE CODE (IFC)
CITY OF KIRKLAND CODE

## ENERGY/VENT NOTES

1. REQUIREMENTS OF THE 2009 WASHINGTON STATE ENERGY CODE AND THE 2009 WASHINGTON STATE VENTILATION & INDOOR AIR QUALITY CODE SHALL BE FOLLOWED.
2. VAPOR RETARDERS OF MIN. 4 MIL POLYETHYLENE OR DRAFT FACED MATERIAL SHALL BE INSTALLED ON THE WARM SIDE (IN WINTER) OF INSULATION. MINIMUM 6 MIL BLACK WATERPROOF BARRIER SHALL BE INSTALLED UNDER SLAB
3. EXTERIOR JOINTS AND PENETRATIONS SHALL BE SEALED, CAULKED, GASKETED, OR WEATHERSTRIPPED.
4. PRIMARY HEATING SYSTEM: SEE MECHANICAL SYSTEM BELOW
5. INDOOR AIR QUALITY PROVIDED BY ENERGY RECOVERY VENTILATION SYSTEM WITH TIMER ADJUSTED TO MEET REQUIREMENTS FOR .35 AIR CHANGES PER HOUR - MINIMUM
6. SPOT VENTILATION FANS: SHALL BE DUCTED TO OUTSIDE. KITCHEN FANS SHALL DELIVER 400 CFM, ALL OTHER FANS 50 CFM AT .25 INCHES OF WATER GAUGE.
7. SOLID FUEL- BURNING APPLIANCES, INCLUDING FIREPLACES, SHALL HAVE TIGHT FITTING METAL OR GLASS DOORS AND OUTSIDE SOURCE OF COMBUSTION AIR OF 6" MIN. AREA, WITH AN OPERABLE OPERABLE DAMPER, DIRECTLY CONNECTED TO THE FIRE BOX, AND TIGHT-FITTING, READILY OPERABLE FLUE DAMPER OR APPROVED AUTOMATIC CONTROL.
8. WATER-HEATERS SHALL MEET REQUIREMENTS OF ASHRAE 90A-80.
9. ALL FAUCETS AND SHOWERHEADS SHALL LIMIT TOTAL FLOW TO A MAXIMUM OF 2.5 GPM; TOILETS TO NO MORE THAN 1.6 GALLONS PER FLUSH
10. ALL EXTERIOR LIGHTING SHALL COMPLY WITH WSEC SECTION 505

## ENERGY CODE COMPLIANCE

INSULATION REQUIREMENTS ARE BASED ON OPTION III (UNLIMITED GLAZING) OF THE 2009 WSEC PRESCRIPTIVE COMPLIANCE REQUIREMENTS.

| | |
|---|---|
| 0.20 | DOOR U-VALUE |
| 0.30 | VERT. GLAZING U-VALUE |
| 0.50 | OVERHEAD GLAZING U-VALUE |
| R-38 | CEILING W/ ATTIC |
| R-38 | CEILING/ VAULTED |
| R-21 | EXTERIOR WALLS |
| R-13 | INTERIOR WALLS (OPTIONAL FOR SOUND) |
| R-30 | FLOOR (OVER CRAWL SPACE) |
| R-10 | FLOOR (SLAB ON GRADE) |

## PROJECT INFORMATION

| | |
|---|---|
| OWNERS | MICHAEL AND BARBARA WATKINS<br>6713 112TH AVENUE NE<br>KIRKLAND, WA 98033<br>425-821-3508 |
| PROJECT ADDRESS | 10424 N.E. 53RD STREET<br>KIRKLAND, WA 98033 |
| JURISDICTION | CITY OF KIRKLAND WASHINGTON |
| TAX PARCEL # | 1234000960 |
| PROJECT DESCRIPTION | MAJOR REMODEL OF EXISTING SINGLE FAMILY HOME |
| LEGAL DESCRIPTION | THAT PORTION OF BLOCK 9, BURKE AND FARRAR'S KIRKLAND ADDITION TO THE CITY OF SEATTLE, DIVISION NO. 1, ACCORDING TO THE PLAT RECORDED IN VOLUME 19 OF PLATS, PAGE 70, IN KING COUNTY WASHINGTON, DESCRIBED AS FOLLOWS;<br><br>COMMENCING AT THE SOUTHWEST CORNER OF LOT 28; THENCE ALONG THE NORTH MARGIN OF NORTHWEST 53RD STREET, N 89°14'38" E 132.46 FEET TO THE TRUE POINT OF BEGINING; THENCE N 0°31'35" W 160.00 FEET; THENCE N 89°14'38" E 91.54 FEET, THENCE S 1°15'04" E 162.12 FEET; THENCE ALONG THE NORTH MARGIN OF NORTHEAST 53RD STREET S 89°14'38" W 127.54 FEET TO THE TRUE POINT OF BEGINING.<br><br>(ALSO KNOWN AS PARCEL B OF SHORT PLAT NO. 77-7-26-LL RECORDED UNDER AUDITOR'S FILE NO. 7708090714.) |

NOTE:
SEE SITE PLAN (SHEET A2) FOR LOT COVERAGE AND ABE CALCULATIONS

## SQUARE FOOTAGE

| | HEATED | UNHEATED | TOTAL |
|---|---|---|---|
| BASEMENT | 1,234 SF | 848 SF | 2,082 SF |
| MAIN FLOOR | 2,275 SF | - SF | 2,275 SF |
| TOTAL | 3,509 SF | 848 SF | 4,357 SF |

| | |
|---|---|
| BASEMENT COVERED PATIO | 285 SF |
| UNFINISHED BASEMENT STORAGE | 242 SF |

| | |
|---|---|
| MAIN FLOOR OUTDOOR STORAGE | 40 SF |

## PROJECT TEAM/CONSULTANTS

| | |
|---|---|
| ARCHITECT | ROBERT MALONEY ARCHITECTS<br>1107 FIRST AVE. SUITE 901<br>SEATTLE, WA 98101<br>206-623-8290 |
| STRUCTURAL ENGINEER | EDWARD JONSON AND ASSOCIATES, P.S.<br>5990 NORTHEAST BATTLE POINT DRIVE<br>BAINBRIDGE ISLAND, WA. 98110<br>206-780-0524 |
| GENERAL CONTRACTOR | CAMBRIE ENTERPRISES, INC.<br>6713 112TH AVENUE NE<br>KIRKLAND, WA 98033<br>425-821-3508 |

## DRAWING INDEX


ARCHITECTURAL
A 1 PROJECT INFORMATION, DOOR/WINDOW SCHEDULES
A 2 EXISTING/DEMOLITION PLAN AND SITE PLAN
A 3 BASEMENT FLOOR PLAN
A 4 MAIN FLOOR PLAN
A 5 ROOF PLAN
A 6 EAST ELEVATION
A 7 WEST ELEVATION
A 8 NORTH AND SOUTH ELEVATIONS
A 9 SECTIONS A, B, C AND D
A 10 SECTIONS E AND F

STRUCTURAL
S 1 GENERAL STRUCTURAL NOTES AND DETAILS
S 2 FOUNDATION PLAN AND DETAILS
S 3 UPPER FLOOR FRAMING PLAN AND DETAILS
S 4 ROOF FRAMING PLAN AND DETAILS
S 5 DETAILS



5593 REGISTERED ARCHITECT
ROBERT A. MALONEY
STATE OF WASHINGTON

ROBERT MALONEY ARCHITECTS
1107 First Ave Suite 901 Seattle WA 98101
206-623-8290 206-623-1105 Fax


WATKINS RESIDENCE
10424 NE 53RD STREET
KIRKLAND, WASHINGTON

| PROJECT | | |
|---|---|---|
| WATKINS | 8-17-10 | PERMIT SUBMITTAL |
| | 12-29-10 | PERMIT REVISIONS |


© 2010
ALL RIGHTS RESERVED


SHEET
A1

EXISTING IMPERVIOUS AREA

| | | |
|---|---|---|
| 18,080 SF | TOTAL LOT AREA | |
| 9,040 SF | ALLOWED IMPERVIOUS (18,080 x .5) | |
| 2,759 SF | (A) RESIDENCE | Area=2,759.333 ft |
| 2,689 SF | (B) DRIVEWAY | Area=2,688.656 ft |
| 5,448 SF | TOTAL AREA | |

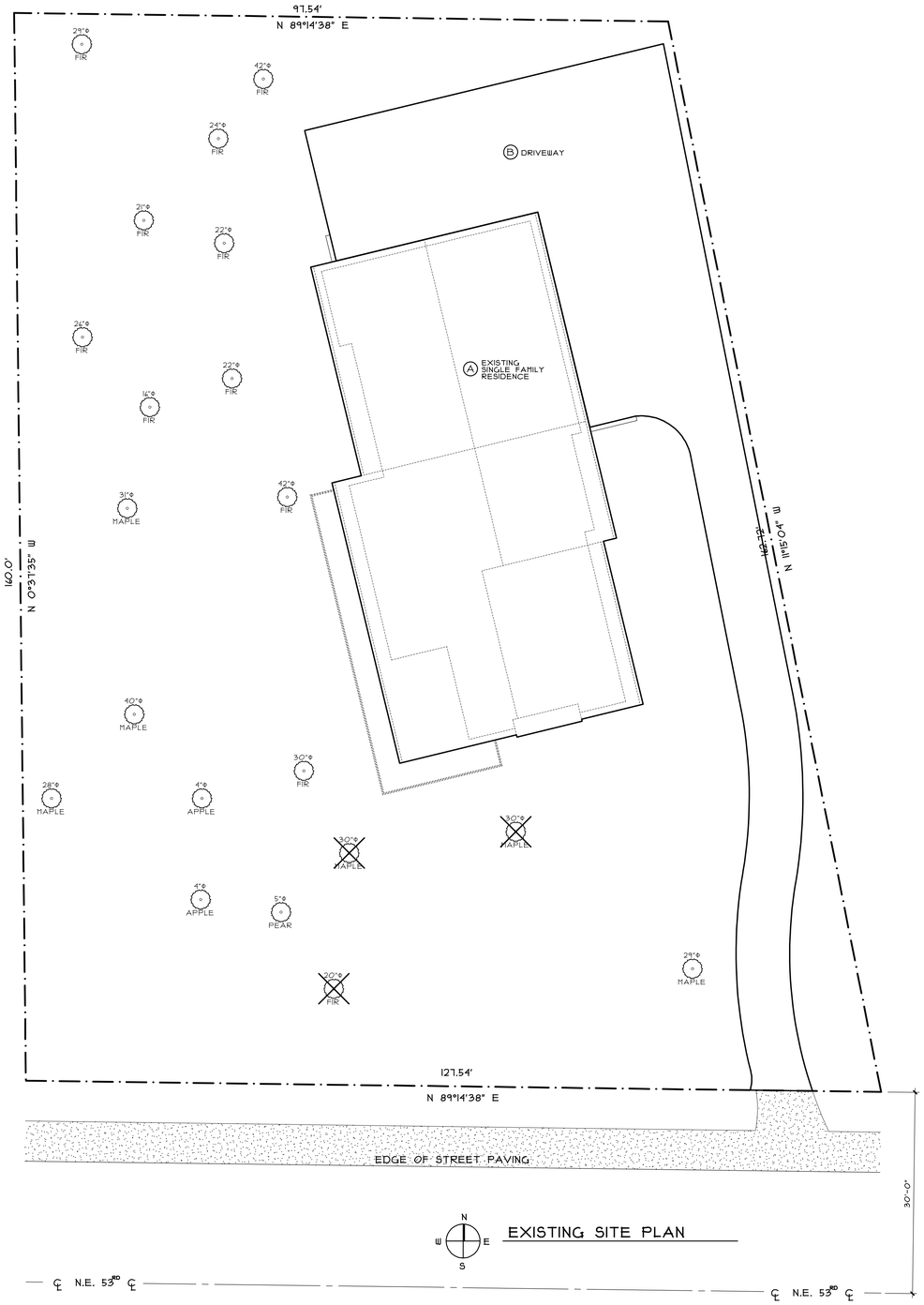


EXISTING SITE PLAN

IMPERVIOUS AREA AFTER CONSTRUCTION IS COMPLETED

| | | |
|---|---|---|
| 18,080 SF | TOTAL LOT AREA | |
| 9,040 SF | ALLOWED IMPERVIOUS (18,080 x .5) | |
| 3,197 SF | (C) RESIDENCE | |
| 594 SF | (D) NEW PATIO | |
| 2,419 SF | (E) DRIVEWAY | |
| 61 SF | (F) SHED | |
| 6,471 SF | TOTAL AREA | |

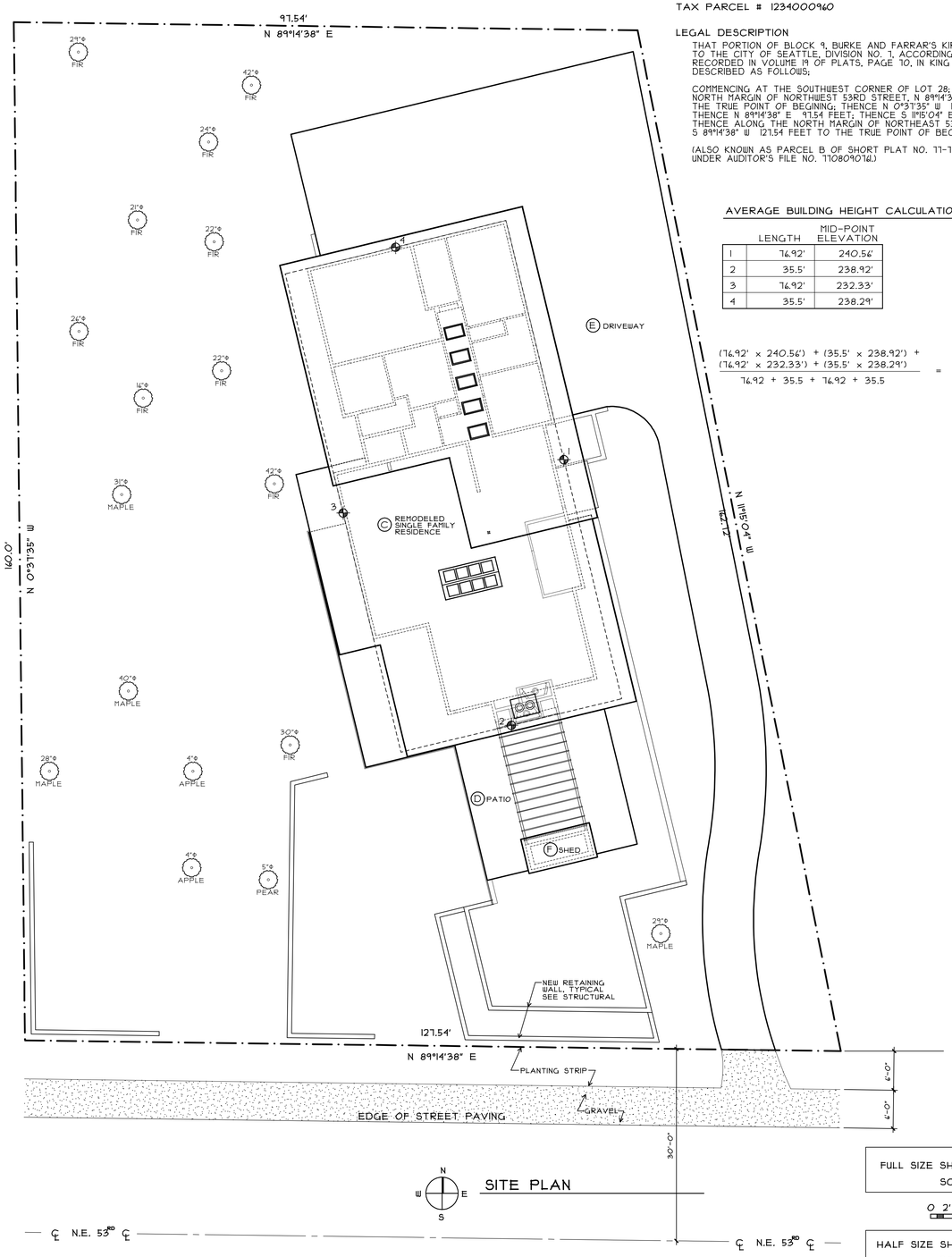


SITE PLAN

FULL SIZE SHEET: 24"x36"
SCALE: 1"=10'-0"

0 2' 5' 10'

HALF SIZE SHEET: 12"x18"
SCALE: 1"=20'-0"

## SITE INFORMATION

SITE ADDRESS:

10424 N.E. 53RD STREET
KIRKLAND, WA 98033

OWNER:
MICHAEL AND BARBARA WATKINS

TAX PARCEL # 1234000960

LEGAL DESCRIPTION

THAT PORTION OF BLOCK 9, BURKE AND FARRAR'S KIRKLAND ADDITION TO THE CITY OF SEATTLE, DIVISION NO. 1, ACCORDING TO THE PLAT RECORDED IN VOLUME 19 OF PLATS, PAGE 10, IN KING COUNTY WASHINGTON, DESCRIBED AS FOLLOWS;

COMMENCING AT THE SOUTHWEST CORNER OF LOT 28; THENCE ALONG THE NORTH MARGIN OF NORTHWEST 53RD STREET, N 89°14'38" E 132.46 FEET TO THE TRUE POINT OF BEGINING; THENCE N 0°31'35" W 140.00 FEET; THENCE N 89°14'38" E 97.54 FEET, THENCE S 115°04' E 142.12 FEET; THENCE ALONG THE NORTH MARGIN OF NORTHEAST 53RD STREET S 89°14'38" W 127.54 FEET TO THE TRUE POINT OF BEGINING.

(ALSO KNOWN AS PARCEL B OF SHORT PLAT NO. 77-7-26-LL RECORDED UNDER AUDITOR'S FILE NO. 7708090741.)

AVERAGE BUILDING HEIGHT CALCULATIONS

| | LENGTH | MID-POINT ELEVATION |
|---|---|---|
| 1 | 74.92' | 240.56' |
| 2 | 35.5' | 238.92' |
| 3 | 74.92' | 232.33' |
| 4 | 35.5' | 238.29' |

$$\frac{(74.92' \times 240.56') + (35.5' \times 238.92') + (74.92' \times 232.33') + (35.5' \times 238.29')}{74.92 + 35.5 + 74.92 + 35.5} = \frac{53315.65}{224.84} = 237.13'$$

ABE → 237.13'

REGISTERED ARCHITECT
ROBERT A. MALONEY
STATE OF WASHINGTON
5293


ROBERT MALONEY ARCHITECTS
1107 First Ave Suite 901 Seattle WA 98101
206-623-8290 206-623-1105 Fax


WATKINS RESIDENCE
10424 NE 53RD STREET
KIRKLAND, WASHINGTON

| PROJECT | | | |
|---|---|---|---|
| WATKINS | 8-11-10 | PERMIT SUBMITTAL | |
| | 12-29-10 | PERMIT REVISIONS | |

© 2010 ALL RIGHTS RESERVED

SHEET
A2

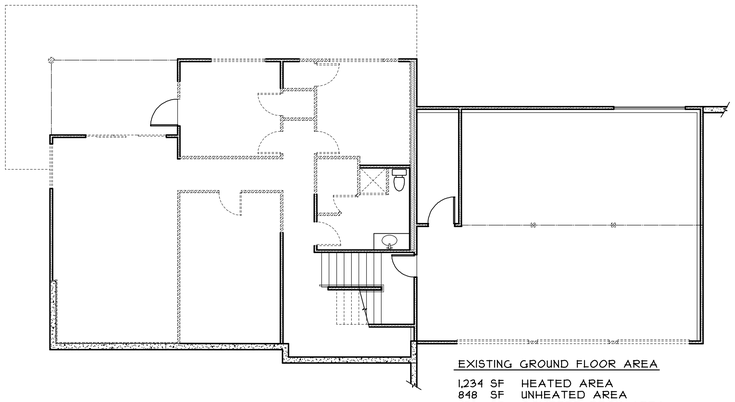

EXISTING GROUND FLOOR AREA

1,234 SF HEATED AREA
848 SF UNHEATED AREA
459 SF COVERED DECK AREA

## BASEMENT DEMOLITION FLOOR PLAN

1/8" = 1'-0"

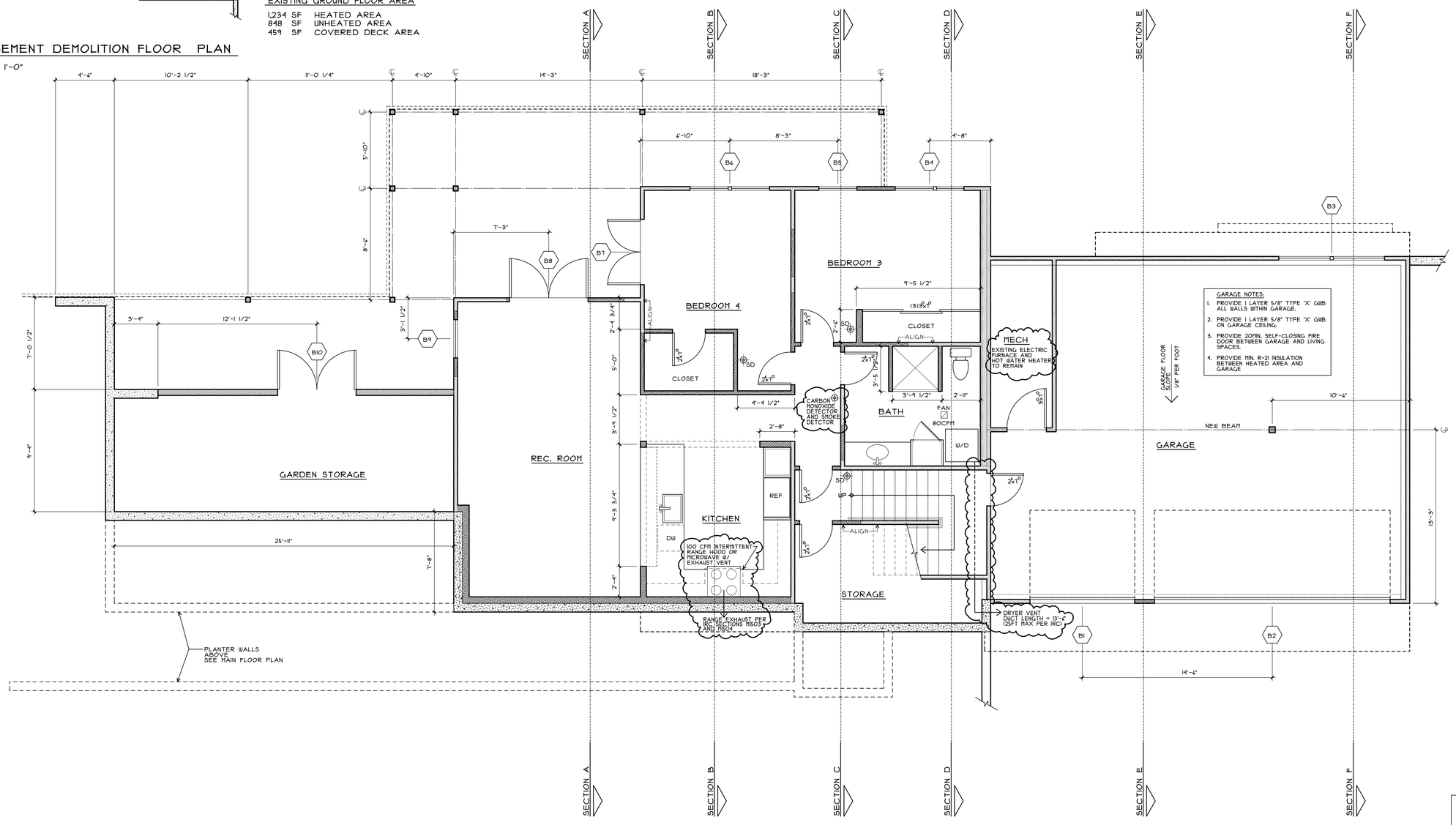


GARAGE NOTES:

1. PROVIDE 1 LAYER 5/8" TYPE 'X' GWB ALL WALLS WITHIN GARAGE.
2. PROVIDE 1 LAYER 5/8" TYPE 'X' GWB ON GARAGE CEILING.
3. PROVIDE 20MIN. SELF-CLOSING FIRE DOOR BETWEEN GARAGE AND LIVING SPACES.
4. PROVIDE MIN. R-21 INSULATION BETWEEN HEATED AREA AND GARAGE

## BASEMENT FLOOR PLAN

1,234 SF HEATED AREA
848 SF UNHEATED AREA
285 SF COVERED PATIO AREA
242 SF UNFINISHED STORAGE AREA

FULL SIZE SHEET: 24"x36"
SCALE: 1/4"=1'-0"

0 1' 2' 4'

HALF SIZE SHEET: 12"x18"
SCALE: 1/8"=1'-0"


REGISTERED ARCHITECT
ROBERT A. MALONEY
STATE OF WASHINGTON

ROBERT MALONEY ARCHITECTS
1107 First Ave Suite 901 Seattle WA 98101
206-623-8290 206-623-1105 Fax


WATKINS RESIDENCE
10424 NE 53RD STREET
KIRKLAND, WASHINGTON

| PROJECT | | | |
|---|---|---|---|
| WATKINS | 11-11-10 | PERMIT SUBMITTAL | |
| | 12-21-10 | PERMIT REVISIONS | |

© 2010 ALL RIGHTS RESERVED

SHEET

A 3

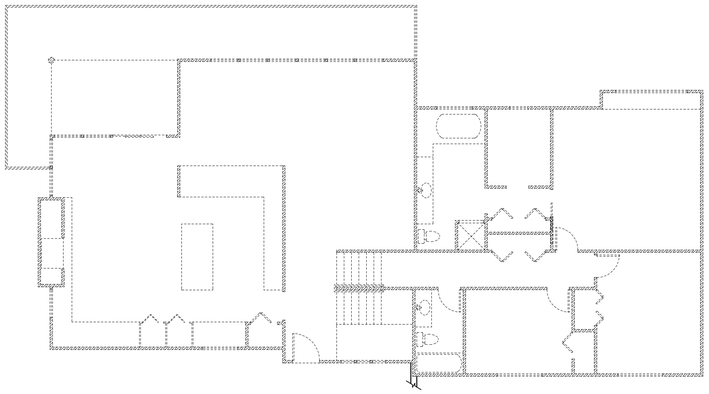

## MAIN DEMOLITION FLOOR PLAN

1/8" = 1'-0"

EXISTING MAIN FLOOR AREA
2,234 SF HEATED AREA
121 SF COVERED PATIO AREA

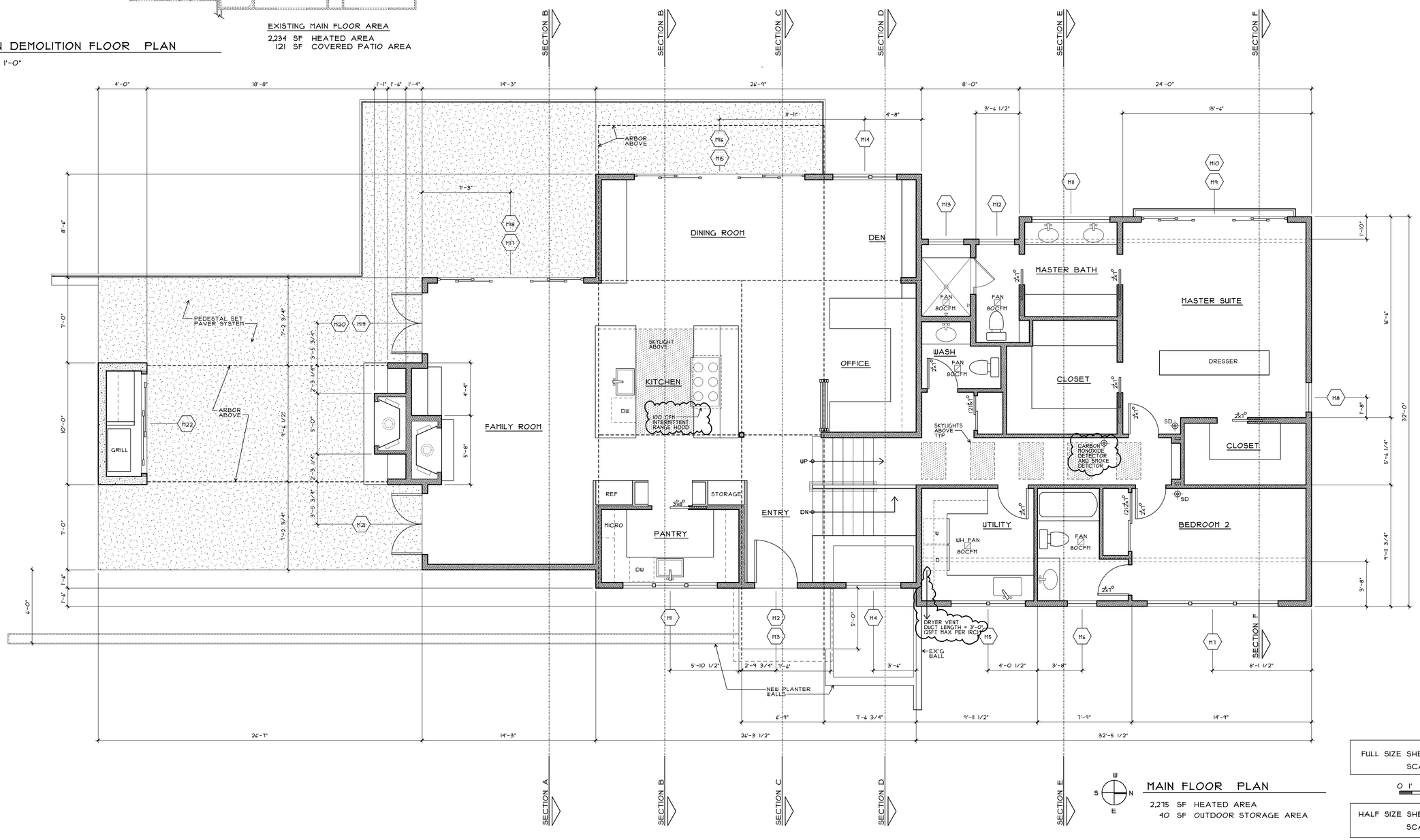


## MAIN FLOOR PLAN

2,275 SF HEATED AREA
40 SF OUTDOOR STORAGE AREA

FULL SIZE SHEET: 24"x36"
SCALE: 1/4"=1'-0"

0 1' 2' 4'

HALF SIZE SHEET: 12"x18"
SCALE: 1/8"=1'-0"


REGISTERED ARCHITECT
5593
ROBERT A. MALONEY
STATE OF WASHINGTON

ROBERT MALONEY ARCHITECTS
1107 First Ave Suite 901 Seattle WA 98101
206-623-8290 206-623-1105 Fax


# WATKINS RESIDENCE

10424 NE 53RD STREET
KIRKLAND, WASHINGTON

| PROJECT | | |
|---|---|---|
| WATKINS | 11-11-10 | PERMIT SUBMITTAL |
| | 12-21-10 | PERMIT REVISIONS |

© 2010 ALL RIGHTS RESERVED

SHEET

A 4

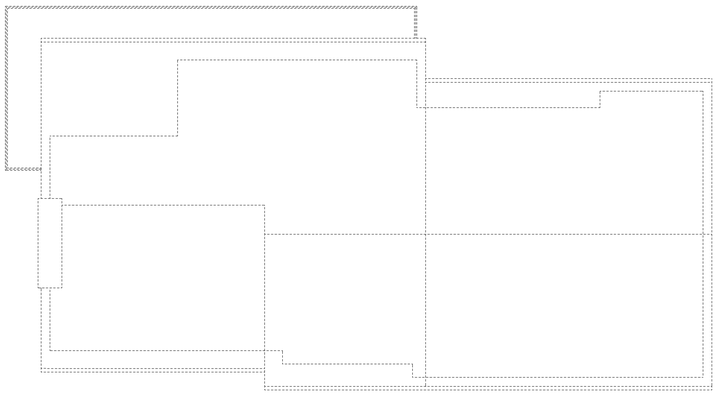

ROOF DEMOLITION PLAN

1/8" = 1'-0"

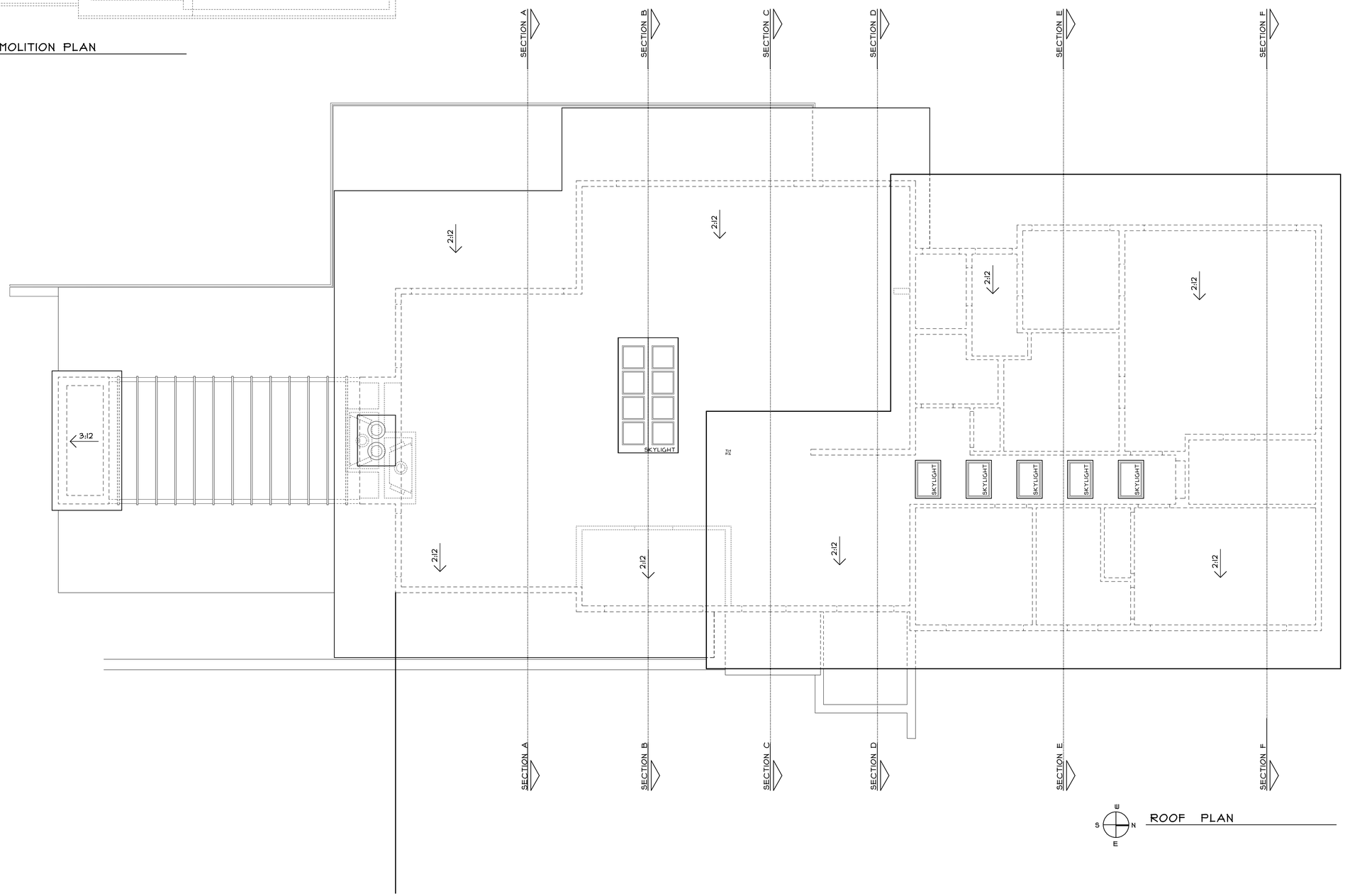


ROOF PLAN

FULL SIZE SHEET: 24"x36"
SCALE: 1/4"=1'-0"

0 1' 2' 4'

HALF SIZE SHEET: 12"x18"
SCALE: 1/8"=1'-0"


REGISTERED ARCHITECT
ROBERT A. MALONEY
STATE OF WASHINGTON
5593

ROBERT MALONEY ARCHITECTS
1107 First Ave Suite 901 Seattle WA 98101
206-623-8290 206-623-1105 Fax


# WATKINS RESIDENCE

10424 NE 53RD STREET
KIRKLAND, WASHINGTON

| PROJECT | | |
|---|---|---|
| WATKINS | 8-11-10 | PERMIT SUBMITTAL |
| | 12-29-10 | PERMIT REVISIONS |


© 2010
ALL RIGHTS RESERVED


SHEET

A 5

EAST ELEVATION

NOTE:

VERIFY EXISTING FLOOR TO FLOOR ELEVATIONS AND DIMENSIONS

ADJUST AS REQUIRED TO STAY BELOW MAXIMUM ALLOWED HEIGHT

TYP

EXISTING EAST ELEVATION

FULL SIZE SHEET: 24"x36"
SCALE: 1/4"=1'-0"

0 1' 2' 4'

HALF SIZE SHEET: 12"x18"
SCALE: 1/8"=1'-0"


REGISTERED ARCHITECT
ROBERT A. MALONEY
STATE OF WASHINGTON

ROBERT MALONEY ARCHITECTS
1107 First Ave Suite 901 Seattle WA 98101
206-623-8290 206-623-1105 Fax


WATKINS RESIDENCE
10424 NE 53RD STREET
KIRKLAND, WASHINGTON

| PROJECT | | |
|---|---|---|
| WATKINS | 11-11-10 | PERMIT SUBMITTAL |
| | 12-21-10 | PERMIT REVISIONS |

© 2010 ALL RIGHTS RESERVED

SHEET
A 6

WEST ELEVATION

NOTE:
VERIFY EXISTING FLOOR TO FLOOR ELEVATIONS AND DIMENSIONS

ADJUST AS REQUIRED TO STAY BELOW MAXIMUM ALLOWED HEIGHT

TYP

EXISTING WEST ELEVATION

FULL SIZE SHEET: 24"x36"
SCALE: 1/4"=1'-0"

0 1' 2' 4'

HALF SIZE SHEET: 12"x18"
SCALE: 1/8"=1'-0"


REGISTERED ARCHITECT
ROBERT A. MALONEY
STATE OF WASHINGTON

ROBERT MALONEY ARCHITECTS
1107 First Ave Suite 901 Seattle WA 98101
206-623-8290 206-623-1105 Fax


WATKINS RESIDENCE
10424 NE 53RD STREET
KIRKLAND, WASHINGTON

| PROJECT | | |
|---|---|---|
| WATKINS | 11-11-10 | PERMIT SUBMITTAL |
| | 12-21-10 | PERMIT REVISIONS |

© 2010 ALL RIGHTS RESERVED

SHEET
A 7

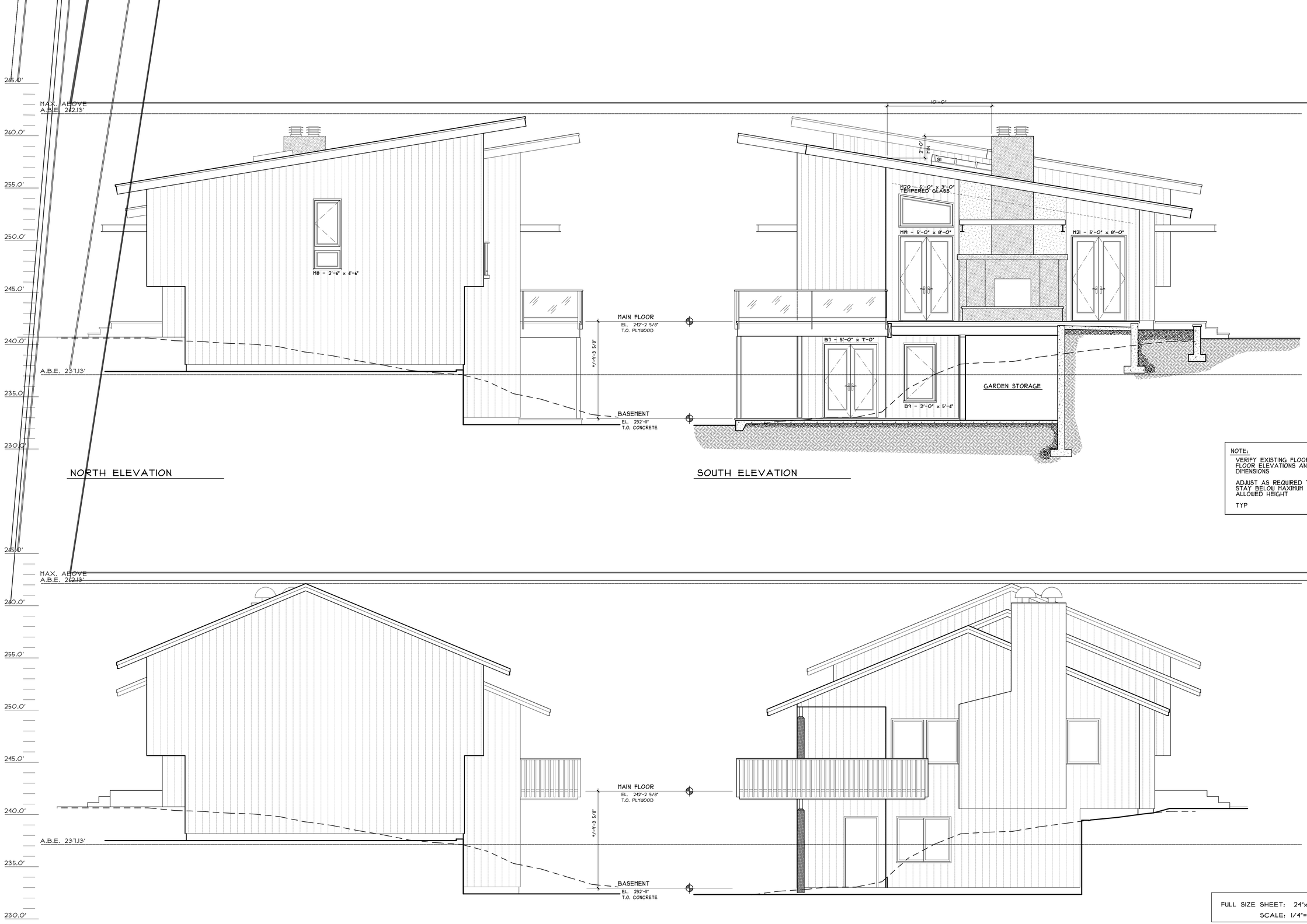


NOTE:

VERIFY EXISTING FLOOR TO FLOOR ELEVATIONS AND DIMENSIONS

ADJUST AS REQUIRED TO STAY BELOW MAXIMUM ALLOWED HEIGHT

TYP

FULL SIZE SHEET: 24"x36"
SCALE: 1/4"=1'-0"

0 1' 2' 4'

HALF SIZE SHEET: 12"x18"
SCALE: 1/8"=1'-0"


REGISTERED ARCHITECT
ROBERT A. MALONEY
STATE OF WASHINGTON

ROBERT MALONEY ARCHITECTS
1107 First Ave Suite 901 Seattle WA 98101
206-623-8290 206-623-1105 Fax


WATKINS RESIDENCE
10424 NE 53RD STREET
KIRKLAND, WASHINGTON

| PROJECT | DATE | PERMIT SUBMITTAL |
|---|---|---|
| WATKINS | 8-11-10 | PERMIT REVISIONS |

© 2010 ALL RIGHTS RESERVED

SHEET

A 8

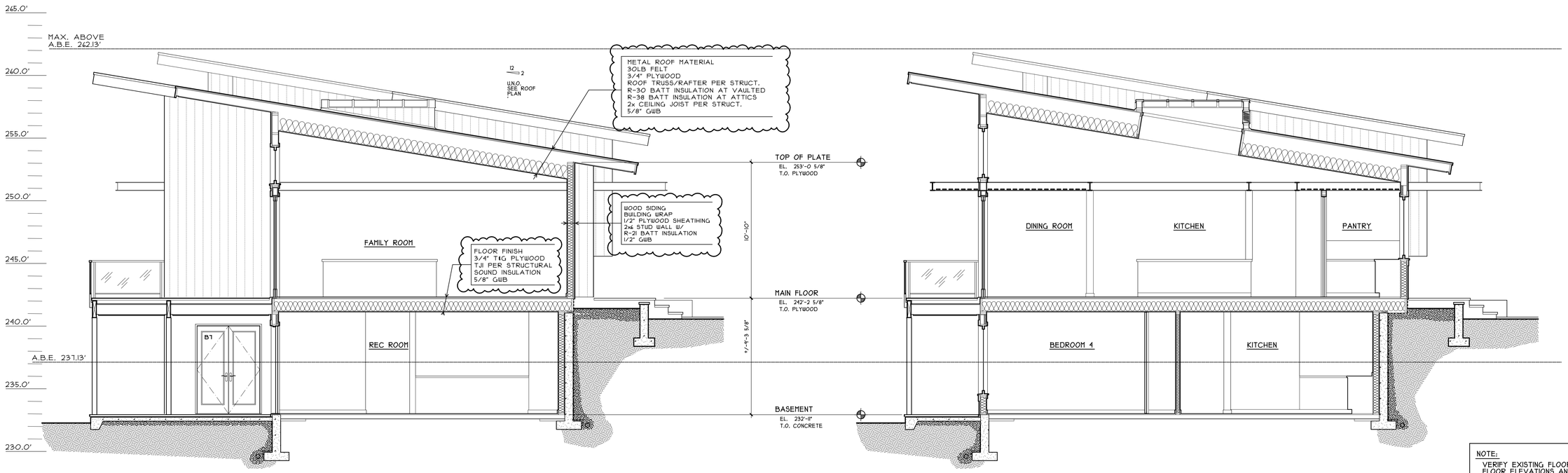


SECTION A

SECTION B

NOTE:

VERIFY EXISTING FLOOR TO FLOOR ELEVATIONS AND DIMENSIONS

ADJUST AS REQUIRED TO STAY BELOW MAXIMUM ALLOWED HEIGHT

TYP

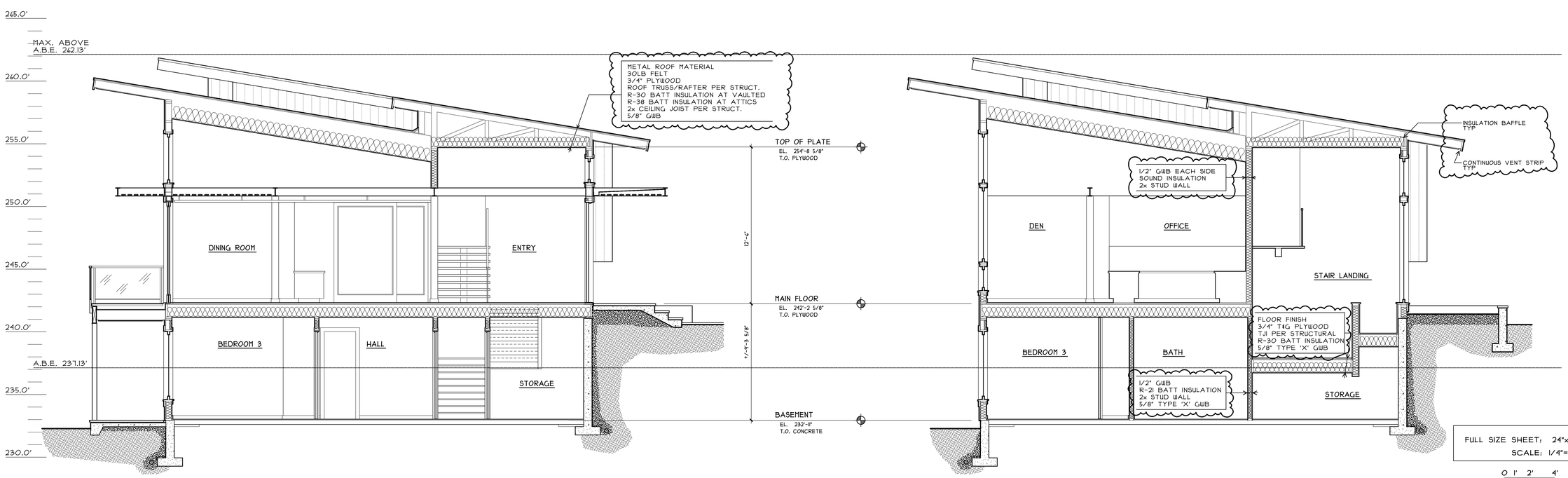


SECTION C

SECTION D

FULL SIZE SHEET: 24"x36"
SCALE: 1/4"=1'-0"

0 1' 2' 4'

HALF SIZE SHEET: 12"x18"
SCALE: 1/8"=1'-0"


REGISTERED ARCHITECT
ROBERT A. MALONEY
STATE OF WASHINGTON

ROBERT MALONEY ARCHITECTS
1107 First Ave Suite 901 Seattle WA 98101
206-623-8290 206-623-1105 Fax


# WATKINS RESIDENCE

10424 NE 53RD STREET
KIRKLAND, WASHINGTON

| PROJECT | | |
|---|---|---|
| WATKINS | 11-11-10 | PERMIT SUBMITTAL |
| | 12-21-10 | PERMIT REVISIONS |

© 2010 ALL RIGHTS RESERVED

SHEET

A 9

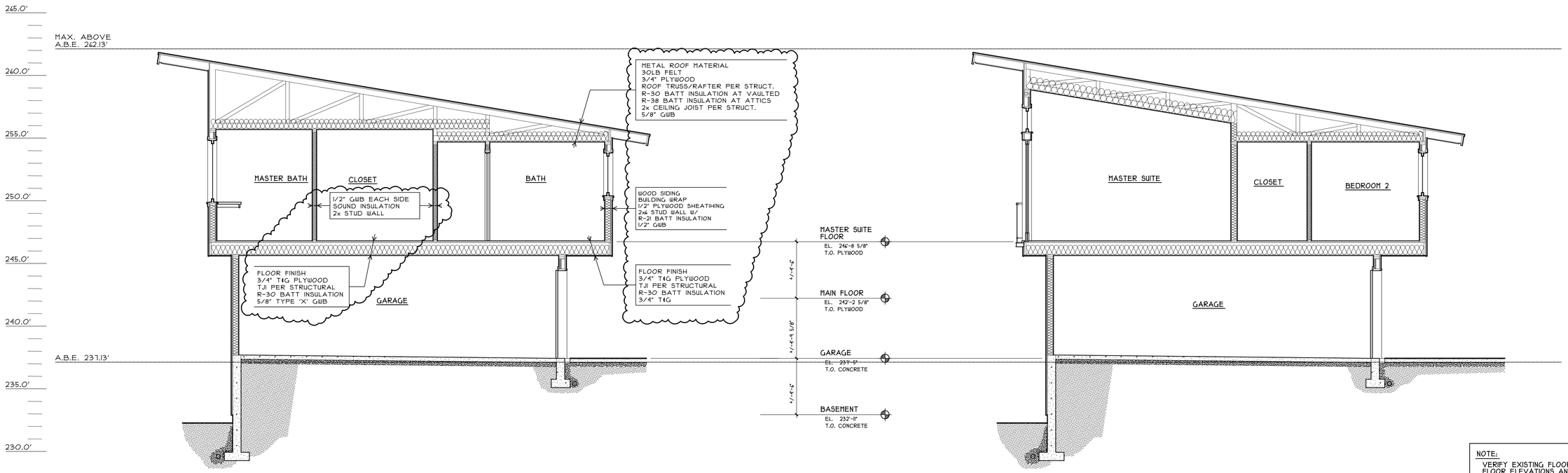


SECTION E

SECTION F

NOTE:
VERIFY EXISTING FLOOR TO FLOOR ELEVATIONS AND DIMENSIONS

ADJUST AS REQUIRED TO STAY BELOW MAXIMUM ALLOWED HEIGHT

TYP

FULL SIZE SHEET: 24"x36"
SCALE: 1/4"=1'-0"

0 1' 2' 4'

HALF SIZE SHEET: 12"x18"
SCALE: 1/8"=1'-0"


REGISTERED ARCHITECT
ROBERT A. MALONEY
STATE OF WASHINGTON

ROBERT MALONEY ARCHITECTS
1107 First Ave Suite 901 Seattle WA 98101
206-623-8290 206-623-1105 Fax


WATKINS RESIDENCE
10424 NE 53RD STREET
KIRKLAND, WASHINGTON

| PROJECT | | PERMIT SUBMITTAL |
|---|---|---|
| WATKINS | 11-11-10 | PERMIT REVISIONS |
| | 12-21-10 | |

© 2010 ALL RIGHTS RESERVED

SHEET
A 10